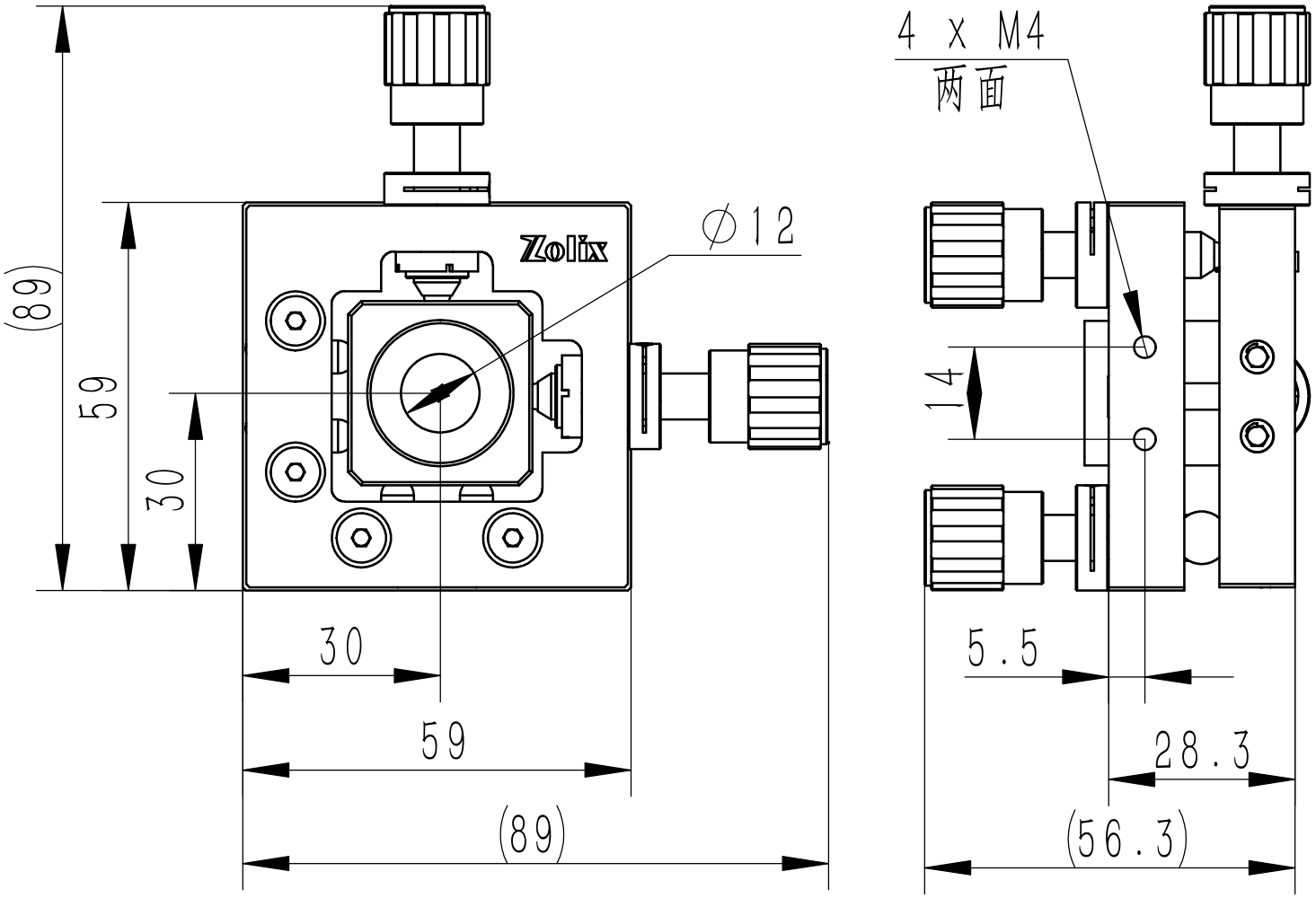
Zolix
∅12
(89)
59
30
30
59
(89)
4 x M4
两面
14
5.5
28.3
(56.3)